Vision ENGINEERING

QUALITY FOCUSED

Award-winning high productivity eyepiece-less stereo microscope **Lynx EVO**

THE QUEEN'S AWARDS FOR ENTERPRISE: INNOVATION 2020

The eyepiece-less advantage

Lynx EVO employs revolutionary Dynascope® technology, improving productivity through unrivalled ergonomics and ease of use.

- **Superior ergonomics promotes greater productivity and efficiency.**
- **A natural view of the subject with easy hand-eye co-ordination.**

Lynx EVO product details

Lynx EVO is a **high productivity** stereo microscope without eyepieces, **powering your productivity** through stunning 3D imaging. The unique **patented eyepiece-less** optics of Lynx EVO liberates users from restrictive working practices, opening up a world of enhanced efficiency through unrivaled ease of use and **ergonomic performance**.

Highlights

In addition to unrivalled ergonomic benefits, Lynx EVO has the flexibility to be tailored to your requirements.

- Modular design allows tailoring for individual applications.
- 10:1 zoom ratio provides 6x - 60x magnification, increasing to 240x with supplementary lenses.
- Integrated HD camera/software (option) provides seamless image/video capture and annotation capabilities.
- Long working distance for easy sample manipulation.
- Flexible stand options, ideal for industrial and life science applications.

Optical excellence

- Lynx EVO incorporates Dynascope® patented optical technology. Dynascope® technology optimizes head and body freedom providing 10mm side-to-side and 70mm front-to-back head freedom.
- 6x – 60x multiplied with supplementary lenses to a total magnification of 240x. 10:1 zoom ratio with indexing lever.
- Iris control within the zoom unit for greater control over the depth of field and contrast.
- Coarse and fine adjustment for fast and precision focusing.

Illumination

- 8-point LED ringlight with intensity control.
- In-built rotating diffuser for contrast adjustment.
- 5-point LED transmitted (substage) illumination (option).

Optical data

Objective lens	Zoom range	Working distance	Field of view at min. zoom	Field of view at max. zoom
0.45x	2.7x – 27x	7″ (176mm)	2.2″ (55mm)	0.3″ (5.5mm)
0.62x	3.7x – 37x	5″ (128mm)	1.6″ (40mm)	0.16″ (4.0mm)
1.0x	6x – 60x	3″ (75mm)	1″ (25mm)	0.1″ (2.5mm)
1.5x	9x – 90x	1.6″ (42mm)	0.7″ (16mm)	0.06″ (1.6mm)
2.0x	12x – 120x	1.2″ (29mm)	0.5″ (12mm)	0.05″ (1.2mm)}

With 1.5x multiplier

Objective lens	Zoom range*	Working distance	Field of view at min. zoom**	Field of view at max. zoom
0.45x	2.7x – 40.5x	7″ (176mm)	2.2″ (55mm)	0.15″ (3.7mm)
0.62x	3.7x – 55.5x	5″ (128mm)	1.6″ (40mm)	0.11″ (2.7mm)
1.0x	6x – 90x	3″ (75mm)	1″ (25mm)	0.07″ (1.7mm)
1.5x	9x –135x	1.6″ (42mm)m	0.7″ (16mm)	0.04″ (1.1mm)
2.0x	12x – 180x	1.2″ (29mm)	0.5″ (12mm)	0.03″ (0.8mm)

With 2.0x multiplier

Objective lens	Zoom range*	Working distance	Field of view at min. zoom**	Field of view at max. zoom
0.45x	2.7x – 54x	7″ (176mm)	2.2″ (55mm)	0.11″ (2.7mm)m
0.62x	3.7x – 74x	5″ (128mm)	1.6″ (40mm)	0.08″ (2.0mm)
1.0x	6x – 120x	3″ (75mm)	1″ (25mm)	0.05″ (1.2mm)
1.5x	9x – 180x	1.6″ (42mm)m	0.7″ (16mm)	0.03″ (0.8mm)
2.0x	12x – 240x	1.2″ (29mm)	0.5″ (12mm)	0.02″ (0.6mm)

* Maximum permissible range with multiplier engaged/disengaged.
** With multiplier disengaged.

Lynx EVO stand options

Ergo stand

- Small footprint for restricted bench space.
- Exceptionally stable for high magnification use.
- Transmitted (substage) illumination (option) permits viewing of a wider range of sample types.
- Floating stage (option) provides sensitive control for accurate inspection of samples; ideal for inspecting fragile samples, or for avoiding contamination by handling.

Multi-axis stand

- Precise and robust, ideal for industrial applications where maximum work space is desired.
- Extended reach permits the inspection of large samples (max. throat depth 17.28″ (439mm).
- Integrated gas strut provides counter-balanced adjustability, making operation quick and effortless. Switch between tall components and flat samples with ease.

Available with platform base or mounted directly to the work surface.

Technical details

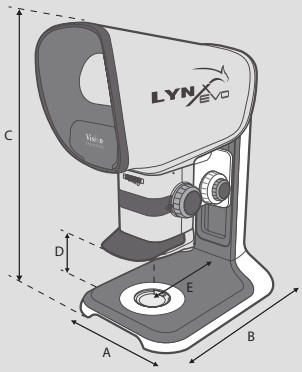

Ergo stand dimensions:
A = 11″ (280mm)
B = 16.5″ (420mm)
C = 26.4″ (670mm) max.
D = 7.9″ (200mm) max.
(less working distance)
E = 7.9″ (200mm)

Unpacked weight: 15.3kg
Packed weight: 19.5kg

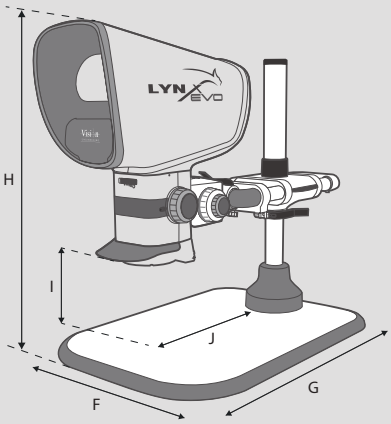

Multi-axis stand dimensions:
F = 18″ (455mm) (7.2″ (184mm)*)
G = 27″ (682mm) - 33″ (830mm)
H = 27″ (695mm) max.
I = 11″ (285mm) max.
(less working distance)
J = 17″ (439mm) max.

* without platform base.

Unpacked weight: 26.6kg
Packed weight: 30.8kg

Get the ergonomic advantage...

Businesses choose **Lynx EVO** because they know their operators are **more efficient**, **more accurate** and **more productive**. The operator benefits and so does the business.

1 Stunning 3D (stereo) imaging

The Lynx EVO advantage begins with stunning 3D (stereo) imaging, viewed through an ergonomic viewing lens.

Patented eyepiece-less optical technology allows users to move within the optical path, effectively looking around the subject, further enhancing the 3D view and depth perception.

2 A natural view of the subject

With conventional 'eyepiece' stereo microscopes, users must position their eyes extremely close to the eyepieces, blocking out ambient light. The intense light exiting the eyepieces causes the pupils to contract. It is this constant opening and closing of the pupils which is the main cause of eye fatigue, leading to headaches.

With the eyepiece-less design of Lynx EVO, users sit back from the viewer, allowing ambient light into the eyes, providing an entirely natural view of the subject.

3 Ability to wear glasses

With Lynx EVO, operators do not need to remove their glasses (or safety glasses) to use the microscope. In fact, you can easily use Lynx EVO in a laminar flow, or safety cabinet.

4 Protection against cross-infection and sample contamination

By removing the contact between eyepieces and the user, Lynx EVO is kept clean, also preventing user contamination affecting sensitive samples in clean and sterile environments.

5 Ergonomic working position

An ergonomic working position not only makes Lynx EVO much more comfortable and much less fatiguing, but also much easier to use. Optimal operator ergonomics minimizes the risk of repetitive strain-related injuries. A happy worker is a productive worker.

6 Freedom of head movement

An additional benefit of Vision Engineering's patented eyepiece-less design is that users do not need to precisely align their eyes with the viewing lens. This freedom of movement reduces the neck and back strain associated with a fixed body position required when using a binocular stereo microscope with eyepieces.

7 Easy hand-eye co-ordination

Sitting back from the viewing lens provides users with much better peripheral vision, allowing natural hand-eye coordination, critical for precision inspection tasks, re-work, repair, dissection and other manipulation activities.

Work more efficiently with Lynx EVO.

Power your productivity through eyepiece-less technology

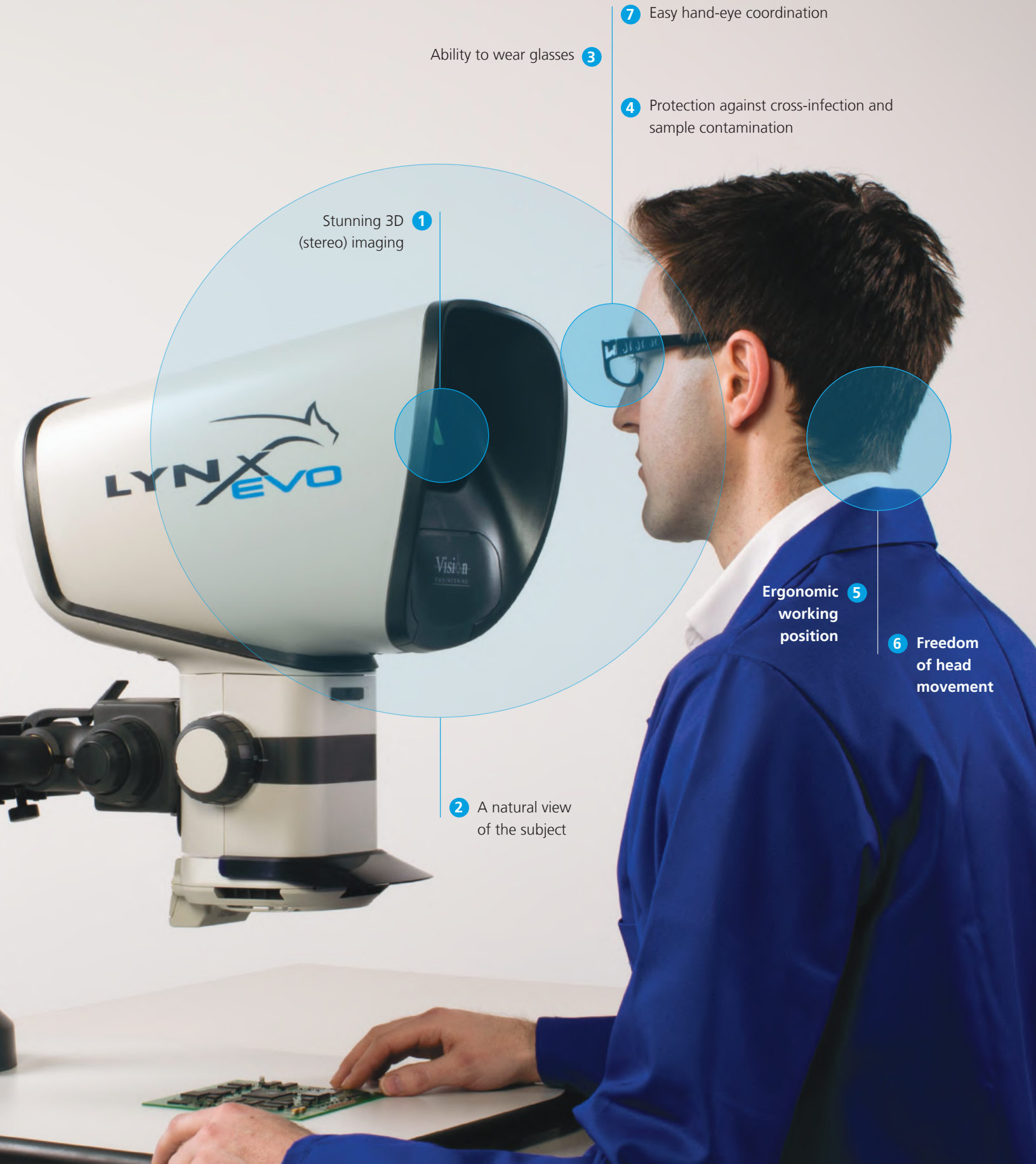

Lynx EVO accessories

Multiplier

- Increases the magnification and zoom range by a factor of 1.5x or 2.0x, significantly extending system magnification capabilities without changing the working distance.
- Available as 1.5x, or 2.0x multipliers, a slide lever simply engages/disengages the multiplier, as required.

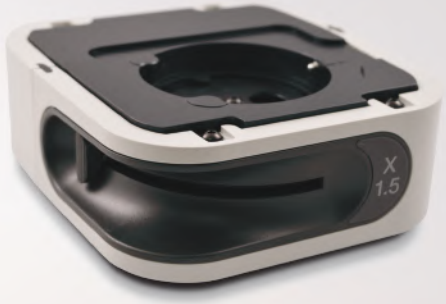

Multiplier

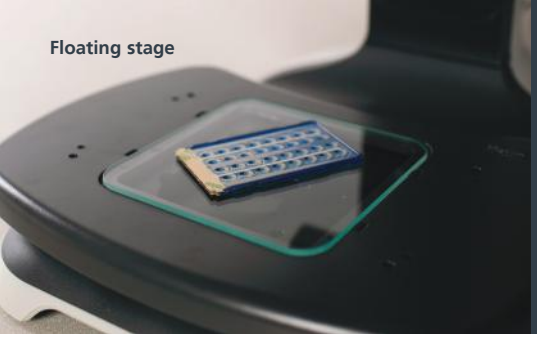
Floating stage

Floating stage

A floating stage accessory for the Ergo stand provides smooth and precise control, ideal for inspecting sensitive samples, checking uniformity of components, or together with the measuring graticule for scaling or measuring subjects.

Objective lenses

Choose from a range of objective lenses to provide the desired magnification range or working distance.

Objective lenses incorporate anti-reflection coatings to enhance imaging performance.

Objective lenses

360° rotating viewer

360° rotating viewer

The 360° rotating viewer for Lynx EVO is the ultimate inspection accessory, permitting a full 360° rotating view of the subject (at an angle of 34°). Operators can simply switch between rotating and a conventional direct view.

Transmitted (substage) illumination

Transmitted illumination (option) permits viewing of a wider range of sample types. Provides flexibility as transparent samples can be viewed by transmitted as well as incident light.

Transmitted (substage) illumination

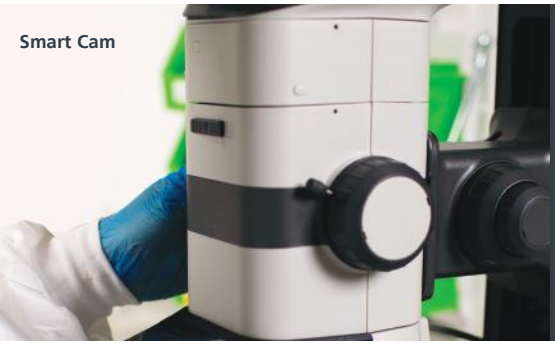
Smart Cam

Smart Cam

Easy and convenient high definition image/video capture while retaining both optical paths (for simultaneous stereo viewing).

The supplied imaging software includes easy annotation and mark-up capability.

Reticle

Both simple cross hair, and measurement reticle (pictured) with scale are available for the Lynx EVO. The measurement reticle allows quick, simple dimensioning of the subject as it is being inspected.

Custom reticles are also available.

Reticle

360° rotating viewer

Lynx EVO accessories

360° rotating viewer

Allows the operator to view a subject from an angle of 34° from vertical, which can be rotated through to 360° enabling a complete stereo view of 3-dimensional subjects.

- The 360° rotation provides enhanced observation for many applications, including electronics, mechanical, medical and plastics components.
- The 34° angle allows details to be seen at the base of any vertical component or feature.
- Simply switch between 360° rotating view and a conventional direct view for ultimate convenience.
- Includes integrated 8-point LED ring light and objective lens.

360° rotating view				
Zoom range	**Working distance**	**Field of view at min. zoom**	**Field of view at max. zoom**	**Viewing angle**
4.2x (16x*) – 42x	1.40″ (35.5mm)	0.40″ (10.2mm)*	0.15″ (3.8mm)	34° from vertical

Direct view				
Zoom range	**Working distance**	**Field of view at min. zoom**	**Field of view at max. zoom**	**Viewing angle**
6.8x (15x*) – 68x	2.22″ (56.5mm)	0.47″ (12.0mm)*	0.098″ (2.5mm)	-

* Uninterrupted

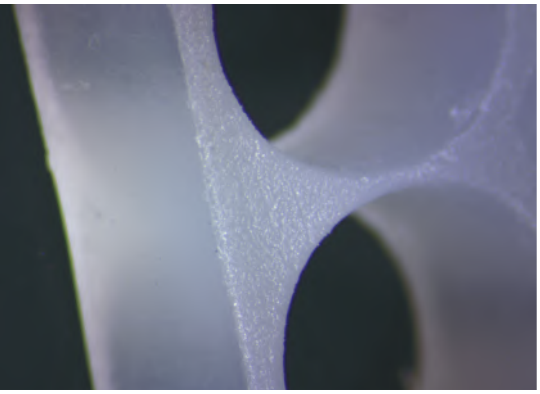

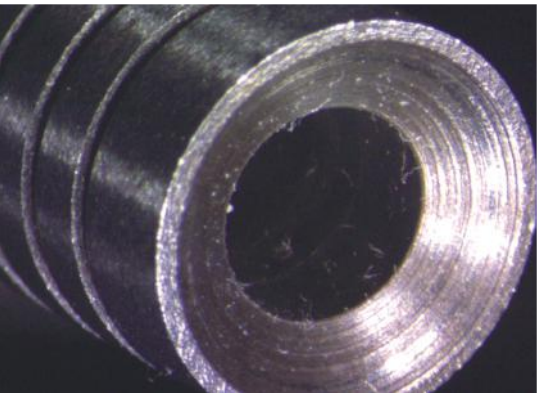

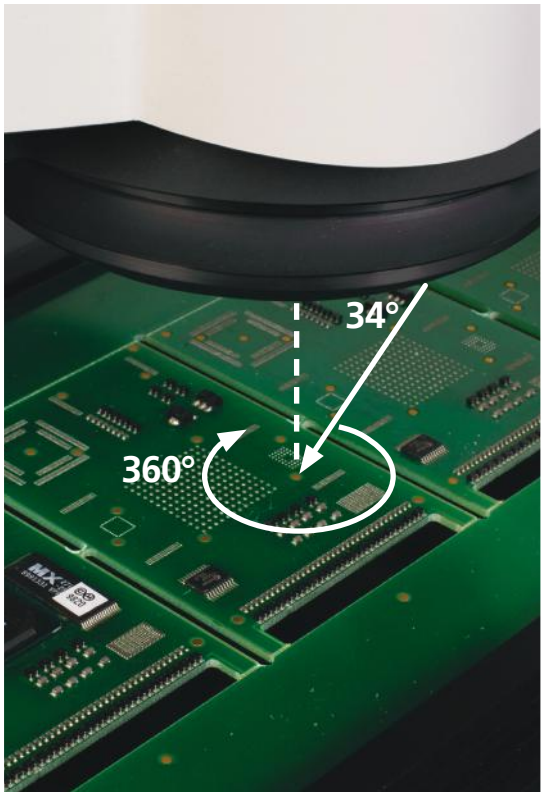

Smart Cam digital camera

Smart Cam digital camera

- Integrated HD camera/software (option) provides seamless image/video capture and annotation capabilities for documentation purposes, with simultaneous on-screen display (via PC). Ideal for demonstration or training.
- Easy convenient image/video capture while retaining both optical paths for stereo viewing.
- USB2.0 interface for easy connectivity.

Camera data	
Sensor type	CMOS
Resolution (W x H)	1600 x 1200 pixels
Sensor size	1/3"
Pixel size	2.8µm
Color depth	8-bit
Refresh rate (fps)	18.3 fps max.
File formats	BMP, JPEG, PNG and AVI
Supplied software	uEye Cockpit (Other solutions available)

Imaging software

- The included software provides easy annotation and quick reporting of inspected products. Annotations can be loaded as separate files and so can be used for template checking.
- Easy image capture in compressed JPEG, PNG, or uncompressed BMP format.
- Record video in highly compatible AVI format, allowing a high level of control over movie clips.

Measuring software option

DimensionOne™ is a powerful software solution for Lynx EVO, providing enhanced annotation, as well as on-screen measurement and dimensioning capabilities. *DimensionOne*™ comes with a CD and calibration artifact for easy on-screen measurement.

Other compatible software solutions are also available.

How Lynx EVO works...

Dynascope® inside

Lynx EVO employs an evolution of Vision Engineering's patented Dynascope® eyepiece-less optical projection technology. Dynascope technology removes the need for conventional microscope eyepieces, providing the user with brilliant, high contrast imaging, unrivaled ergonomic performance and amazing ease of use.

Dynascope® technology explained

Lynx EVO is a true optical stereo microscope. High resolution, true-color optical images are viewed through an ergonomic eyepiece-less viewing head.

Light reflects from the patented Dynascope optics, exiting the single viewing lens as twin (stereo) light paths. The large diameter of these exit rays means that users do not need to precisely align their eyes with the viewing lens in order to see the image.

The result is an incredibly easy-to-view, high resolution stereo (3D) image. Without the need for eyepieces.

Did you know?

At the heart of Vision Engineering's patented Dynascope® eyepiece-less technology is a spinning multi-lenticular (multi-lens) disc. On the surface of the disk there are more than 3.5 million individual lenses (known as lenticules), which act as independent image-forming surfaces. Each individual lens has a diameter of just a few microns (1 micron = 0.00004" (0.001mm)).

The multi-lenticular disk spins at high speed to merge the millions of individual optical paths into a high-clarity image.

Twin (stereo) optical paths projected from the Dynascope® viewing head.

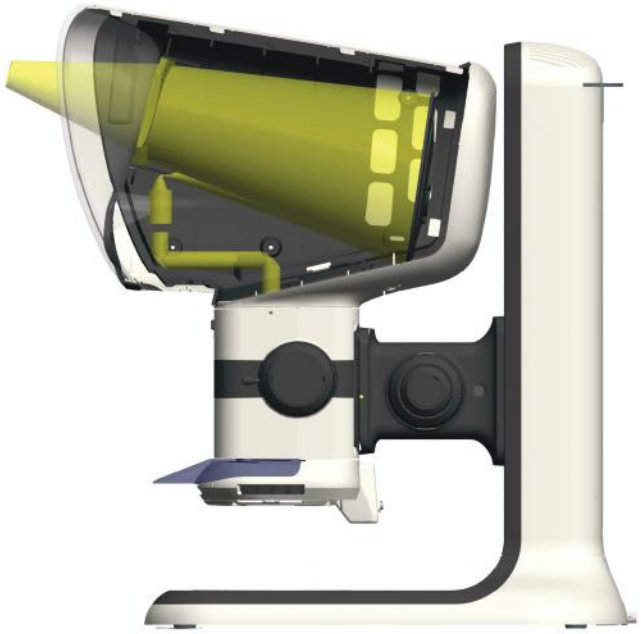

Electronics

Lynx EVO is ideal for electronics PCB inspection and re-work. The patented optical viewing head of Lynx EVO provides unrivalled 3D viewing with ergonomic advantages of simplified hand-eye coordination.

Medical devices

From stents to catheters, medical device components require 100% inspection to ensure every product meets an exacting specification.

See every detail with Lynx EVO, time-after-time, across the entire shift.

Precision engineering

Precision engineered components cover a very wide range of industries, from aerospace or automotive to watchmaking and general manufacturing. Lynx EVO's clear view and superior ergonomics are ideal for precision inspection, aiding visual accuracy and minimizing errors caused by user fatigue.

Plastics and rubber

Rubber seals, packaging, caps and closures are precision manufactured to work effectively. Inspection for quality is essential. Stunning 3D (stereo) viewing with a long working distance make inspection or re-work tasks such as flash removal easy.

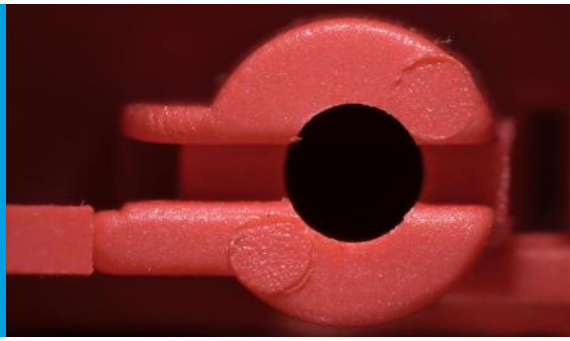

Laboratory / Life sciences

Sample preparation and dissection in a laboratory is made safer and easier with Lynx EVO. The eyepiece-less viewing head not only allows protective goggles or glasses to be worn, but also allows Lynx EVO to be used when placed in a laminar flow, or safety cabinet.

Reticle

Both simple cross hair, and measurement reticle (pictured) with scale are available for the Lynx EVO.

The measurement reticle allows quick, simple dimensioning of the subject as it is being inspected.

Custom reticles are also available.

VISION ENGINEERING
+ OUR DIFFERENCE

Vision Engineering Ltd. has been designing and manufacturing high quality ergonomic microscopes, digital instruments, inspection and non-contact measuring systems for over 60 years.

Innovation

With a philosophy of design innovation, Vision Engineering holds world patents for a number of optical / digital techniques, significantly improving viewing ergonomics and enabling customer quality and productivity improvements.

Quality

Vision Engineering prides itself on quality products, electronics, mechanics and optics and is certified for the quality management system ISO 9001:2015. Quality is as important to us as our customers. Our systems have proved themselves many times over and are chosen by the world's best companies.

Global

Vision Engineering has manufacturing and design facilities in the UK and USA, plus sales and support offices throughout Europe, the Far East, Asia and the Americas. We support our customers with close technical and service support anywhere in the world.

To see our focused quality, please contact your Vision Engineering authorized distributor, or visit our website: **QSource.com/**

QSOURCE Inc.
Best Value. Better Service.

NAME: QWEB
PHONE: QWEB@QSOURCE.COM
EMAIL:

Vision Engineering Ltd. (UK Manufacturing & Commercial)
The Freeman Building, Galileo Drive, Send, Surrey, GU23 7ER, UK
T +44 (0) 1483 248300
E generalinfo@visioneng.co.uk

Vision Engineering Ltd. (Italia)
Via G. Paisiello 106
20092 Cinisello Balsamo MI, Italia
T +39 02 6129 3518
E info@visioneng.it

Vision Engineering (South East Asia)
P-03A-20, Impian Meridian, Jalan Subang 1, USJ 1, 47600 Subang Jaya, Selangor Darul Ehsan, Malaysia
T +604-619 2622
E info@visioneng.asia

Vision Engineering (Mexico)
T +01 800 099 5325
E infomx@visioneng.com

Vision Engineering Inc. (NA Manufacturing & Commercial)
570 Danbury Road, New Milford, CT 06776, USA
T +1 (860) 355 3776
E info@visioneng.com

Vision Engineering Ltd. (France)
ZAC de la Tremblaie, Av. de la Tremblaie
91220 Le Plessis Paté, France
T +33 (0) 160 76 60 00
E info@visioneng.fr

Vision Engineering (China)
Room 904B, Building B, No.970, Nanning Road, Xuhui Vanke Center Shanghai, 200235, P.R. China
T +86 (0) 21 5036 7556
E info@visioneng.com.cn

Vision Engineering (Brazil)
E info@visioneng.com.br

Vision Engineering (Latin America)
E infomx@visioneng.com

Vision Engineering Ltd. (Central Europe)
Anton-Pendele-Str. 3, 82275 Emmering, Deutschland
T +49 (0) 8141 40167-0
E info@visioneng.de

Nippon Vision Engineering (Japan)
272-2 Saedo-cho, Tsuduki-ku, Yokohama-shi, Kanagawa 224-0054, Japan
T +81 (45) 935 1117
E info@visioneng.jp

Vision Engineering (India)
T + 91 (0) 80-5555-33-60
E info@visioneng.co.in

FM 557119

Vision Engineering Ltd. has been certified for the quality management system ISO 9001:2015 and calibration accreditation ISO 17025:2017.

Disclaimer- Vision Engineering Ltd. has a policy of continuous development and reserves the right to change or update, without notice, the design, materials or specification of any products, the information contained within this brochure/datasheet and to discontinue production or distribution of any of the products described.
EO&E: Errors and omissions accepted.

Lynx_EVO_Brochure_English-US_LIT5430EN-US_02 | **Copyright ©2021 Vision Engineering Ltd. | All rights reserved.**

visioneng.us